1. Amp gain 60 mA/V

$R_i = 1k$, $R_o = 5k$

$R_s = 250$

a.

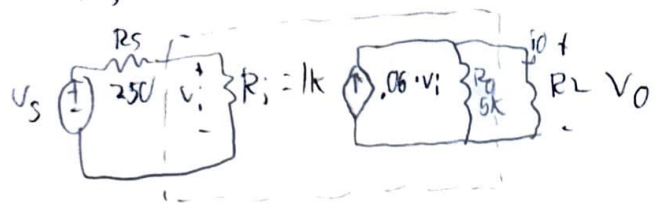

b. $V_i = \frac{1}{1.25}(V_s) = \frac{4}{5}(.05) = .04$

$.04 \times .06 = .0024 = 2.4 mA$

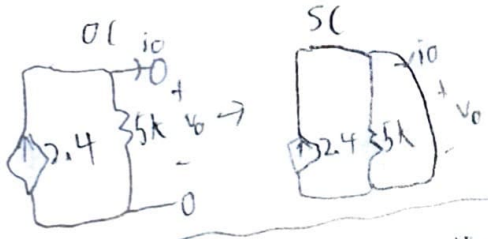

$2.4 \cdot 5k = 12V$ $\quad$ $i_o = 2.4 mA$

$i_o = 0A$ $\quad$ $V_o = 0V$

c. RMS for power

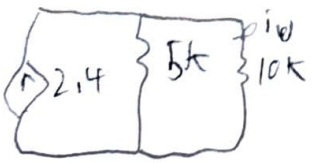

$i_o = \left(\frac{5}{15}\right) .0024 = .8 mA$

$\frac{(.8)^2 \cdot 10k}{2} = \boxed{3.2 mW}$

2.

A

$A = 100 \frac{V}{V}$

$R_i = 100k$

$R_o = 10k$

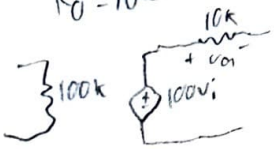

B

$B = 10 \frac{V}{V}$

$R_i = 10k$

$R_o = 1k$

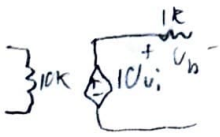

AB

$.01\left(\frac{100k}{200k}\right) = .005$

$.005 \times 100 = .5$

$.5\left(\frac{10k}{20k}\right) = .25$

$10 \cdot .25 = 2.5$

$2.5\left(\frac{100}{1100}\right) = .27V$ Volt

$\frac{.27}{.01} = 27.27 V/V$

$20\log(27.27) = 27.12 dB$

BA

$.01\left(\frac{10k}{110k}\right) = 9.09 \times 10^{-4}$

$9.09 \times 10^{-4} \times 10 = 9.09 \times 10^{-3}$

$9.09 \times 10^{-3}\left(\frac{100k}{101k}\right) =$

$9 \times 10^{-3} \times 100 =$

$.9\left(\frac{100}{10000}\right) = .009V$

$\frac{.009}{.01} = .9 V/V$ Bad

$20\log(.009) = -.92 dB$

SABL is much better

3.

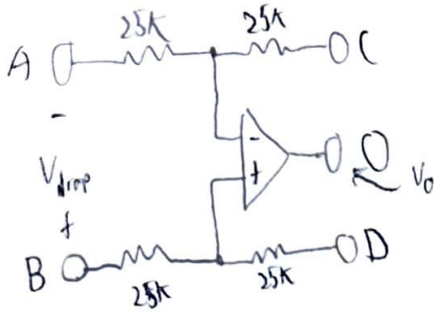

unity gain means

$V_{drop} = V_o$

$\frac{V_{drop}}{V_o} = 1 \frac{V}{V}$

unity gain config

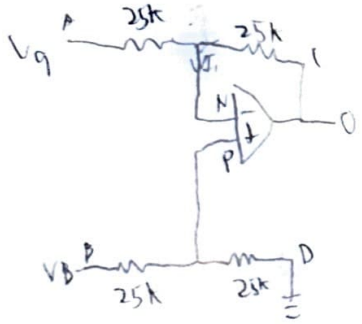

$V_P = \left(\frac{25k}{50k}\right) V_B = V_P = \frac{1}{2} V_B$

Ideality

$V_n = V_p = \frac{1}{2} V_B$

$I_1 = \frac{V_A - V_N}{25k} - \frac{V_N - V_o}{25k} = \frac{2V_A - V_B}{50k} - \frac{V_B - 2V_o}{50k} = 0$

a.

$2V_A - V_B - V_B + 2V_o = 0$

$V_o = V_B - V_A = V_{drop}$ V

b.

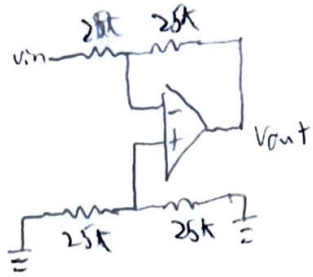

For $-1 V/V$ gain, make inverting amp

$R2 = R1 = 25k$

$\frac{V_{out}}{V_{in}} = \frac{-R2}{R1} = \frac{-25k}{25k} = -1 V/V$

for $1 V/V$ gain, make non inverting amp

$R2 = R1 = 25k$

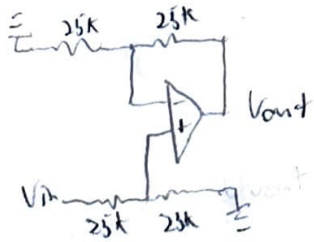

$V_{out} = V_{in}\left(1 + \frac{R2}{R1}\right)$

but V_{in} is really $V_{in}\left(\frac{25k}{50k}\right) = V_{in}\frac{1}{2}$ b/c of voltage div, so

$\frac{1}{2} V_{in}\left(1 + \frac{25k}{25k}\right) = \frac{1}{2} V_{in}(2)$

$V_{out} = V_{in}$

$\frac{V_{out}}{V_{in}} = 1 V/V$

For $2 V/V$ gain, negate the bottom voltage div somehow

$R1 = R2 = 25k$

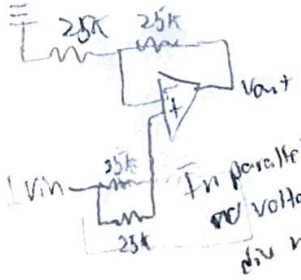

In parallel, no voltage div now

$V_{out} = V_{in}\left(1 + \frac{R2}{R1}\right)$

$V_{out} = V_{in}(1+1)$

$\frac{V_{out}}{V_{in}} = 2$

$2 V/V$

For $\frac{1}{2} V$ gain, revert back to $1 V$ gain and connect top resistors (R1 and R2) in parallel to half voltage

$V_{out} = \frac{1}{2}\left(\frac{1}{2} V_{in}\left(1 + \frac{25k}{25k}\right)\right) = \frac{1}{4} V_{in}(2)$

$\frac{V_{out}}{V_{in}} = \frac{1}{2}$

$\frac{1}{2} V/V$

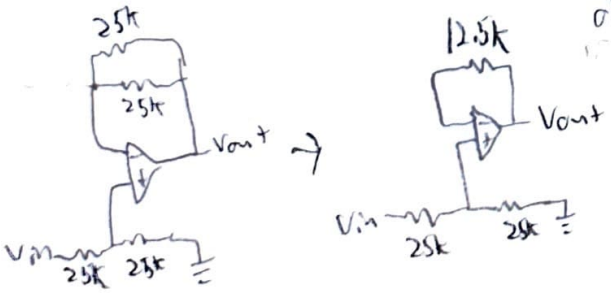

old Vout = current · 25k, now its current · 12.5k. It's half of a normal non inverting op amp

4.

inverting op amp

$v_{in}(t) = 2 + 3\sin(2\pi 10^9 t)$

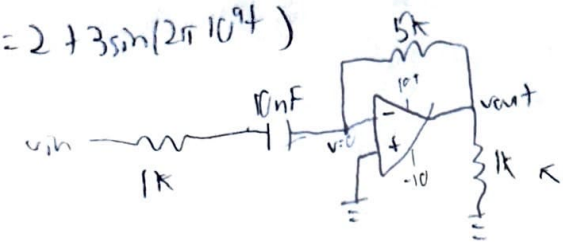

← does not change vout

$\frac{V_{out}}{V_{in}} = \frac{-R_2}{R_1}$

$\frac{V_{out}}{V_{in}} = \frac{-5k}{1k} = -5V/V$

High pass

$\frac{1}{1k \cdot 10nF} = \tau$

differentiator and high pass filter

$\frac{100000}{2\pi} = 15915.49hz$

$\rightarrow 15915.49$

gain $= -5 V/V$

$\frac{2\pi 10^9}{2\pi} = 10^9 > 15915.49$ 2 has $f = 0 < 15915.49$

so $V_{out} =$

$-15\sin(2\pi 10^9 t)$ ← will be clipped b/c op amp is limited to 10V or -10V output max

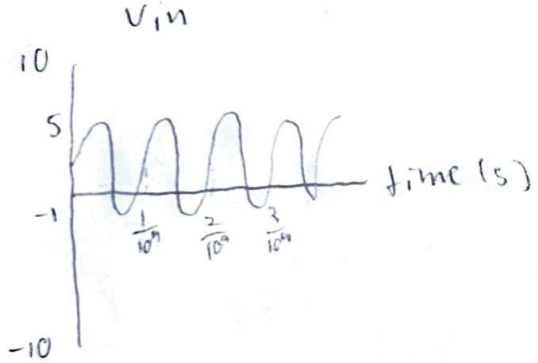

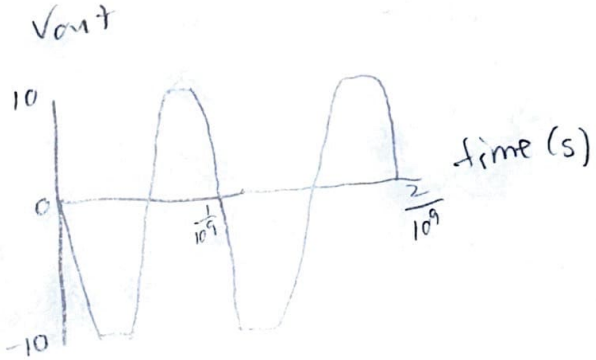

Problem 5.! Part E.

Yes it can be used to remove high freq noise. This is b/c this circuit acts like a low pass filter but also amplifies the signal by 1.5. All of the signal above 53k Hz gets grounded and not passed through the op amp.

5.

non inverting at DC

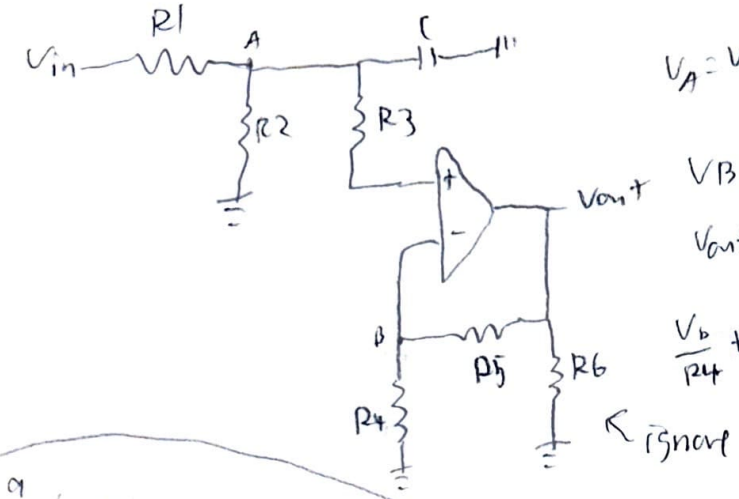

$V_A = V_{in}\left(\frac{R2}{R1+R2}\right)$

$V_B = V_A$

$V_{out} = \frac{R5}{R5+R6}(V_B)$

$\frac{V_b}{R4} + \frac{V_b - V_{out}}{R5} = 0$

$\frac{V_{in}\left(\frac{R2}{R1+R2}\right)}{R4} + \frac{V_{in}\left(\frac{R2}{R1+R2}\right) - V_{out}}{R5} = 0$

$V_{in}\left(\frac{R2}{R1+R2}\right)\left(\frac{1}{R4}+\frac{1}{R5}\right) = \frac{V_{out}}{R5}$

$V_{in}\left(\frac{R2}{R1+R2}\right)\left(\frac{R5}{R4}+1\right) = V_{out}$

$\frac{V_{out}}{V_{in}} = \left(\frac{R2}{R1+R2}\right)\left(\frac{R5}{R4}+1\right)$

a

at DC

i. $R_{in} = R1+R2$

ii $\text{gain} = \left(\frac{R2}{R1+R2}\right)\left(\frac{R5}{R4}+1\right)$

b. at very high freq

i. $R_{in} = R1$

ii. gain = 0 (no voltage at V_A)

c. This is a low pass filter b/c

i. there is a gain at 0 or low freq, but no gain at high freq

ii. $R_{eq} = R1 \| R2$

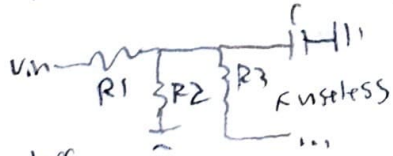

iii. $\frac{1}{2\pi(R1\|R2)(\quad}$ = cutoff freq (in Hz)

i. $\text{gain} = \left(\frac{4k}{12k+4k}\right)\left(\frac{15k}{3k}+1\right) = 1.5$

beyond cutoff freq. gain = 0

cutoff freq $= \frac{1}{2\pi(10^{-9})\left(\frac{4\cdot 12}{4+12}\right)} = 53051.6477\ Hz$

gains: 1.5 V/V before cutoff
0 V/V after cutoff

cutoff freq: 53051.6477 Hz

i. again, $v_{in} = 2 + 5\sin 100\pi t + 3\sin(2\pi 10^{10})t$ ← too high; dies

$V_{out} = \frac{3}{2}(2) + \frac{3}{2}(5\sin 100\pi t)$

$V_{out} = 3 + \frac{15}{2}\sin 100\pi t$

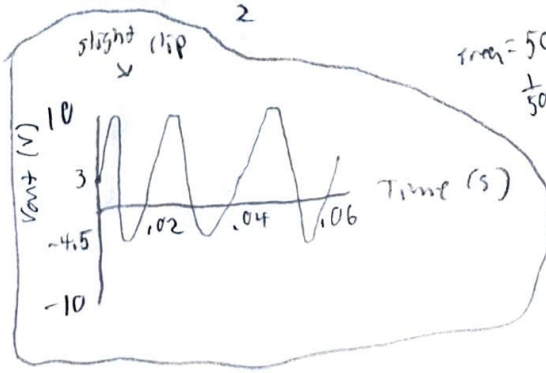

d.

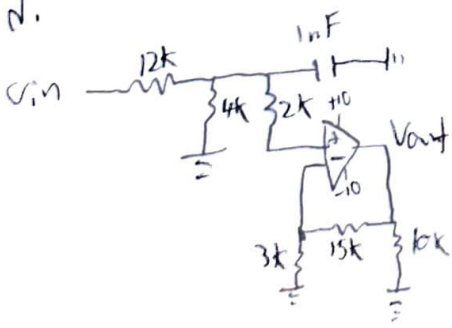

$V_b\left(\frac{R5}{R4}+1\right) = V_{out}$

$V_b(5+1) = 3 + \frac{15\sqrt{2}}{2}$

$V_b = 1.38$

ii R3 has no current; power = 0

R4 has $\left(\frac{15}{2}\cdot\frac{1}{\sqrt{2}} + 3\right)\left(\frac{R4}{R4+R5}\right) = \left(\frac{15}{2\sqrt{2}} + 3\right)\left(\frac{1}{6}\right) = \frac{5}{4\sqrt{2}} + \frac{1}{2}$ (RMS)

$\frac{5\sqrt{2}}{4} + \frac{1}{2} \approx 1.38$

$\frac{(1.38)^2}{3000} = \boxed{.638\ mW}$